Patriot L Quickstart Guide

STEP 1: Power Connections

The Patriot ships with a regulated DC power supply of +12VDC @ 3A. The wiring is shown below:

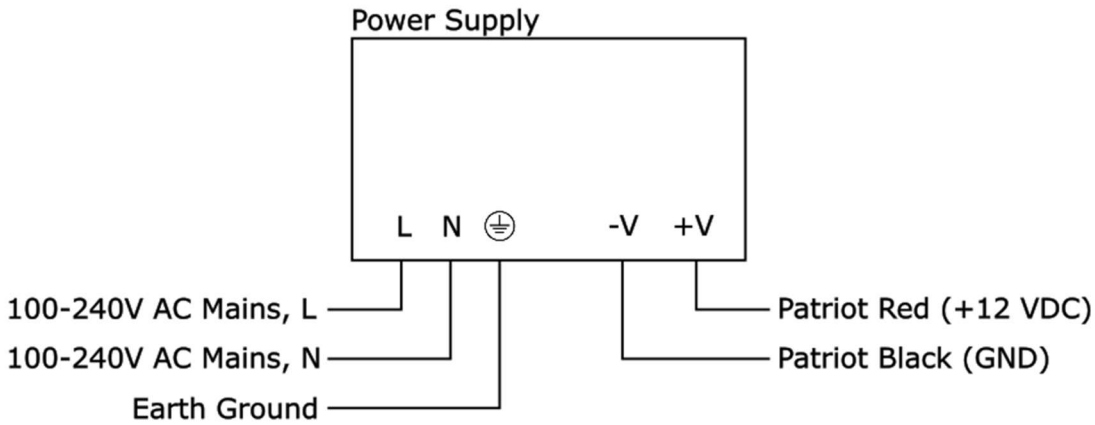

The Mains L, N, and Earth Ground wires are supplied by you. The -V and +V wires are on the Patriot pigtail cable. EMX recommends using the included power supply, but any supply from 9-48 VDC with at least 10W of power will work.

STEP 2: Mounting the Reader

The mounting bracket supplied is designed for mounting the reader on a pole, wood, or concrete structure.

- The bracket should be installed at a minimum height of 5' off the ground. Mounting the reader too low will reduce range.
- Ensure a minimum of 18" from any metal or concrete surface on all sides (excluding the bracket and mounting pole). Consider using EMX's 18" wall stanchions or 94" S-shaped post to make mounting easy.
- Anything in the reader's field of view can reduce the read range due to RF reflections. This includes barrier arm operator enclosures, bollards, kiosks, etc.
- Aim the reader toward the zone of desired coverage. To achieve maximum range do not aim it downward. Maximum range is 18-25'.
- Use a 10mm wrench to mount the reader to the bracket and a 13mm wrench to mount the U-bolt to the pole.

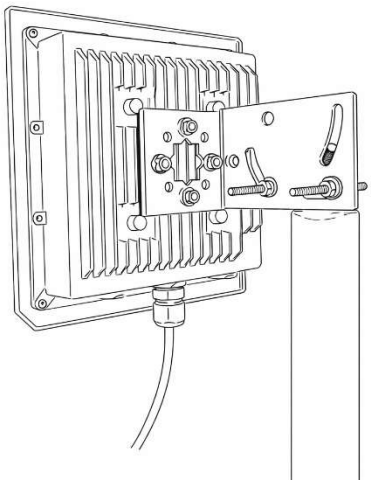

STEP 3: Testing the Reader

Functional Test: Bring a tag within a few feet of the reader. You should see the blue LED on the front of the reader light and hear an audible beep. The reader will continue to beep every 1 second and the LED will light every 2 seconds for as long as the tag is in range (this is the default configuration; if your reader has a custom configuration consult the manual). If the reader is not reading the tag, make sure that you are holding the tag from

the edges or pinching it directly in the center since fingers pinching it on one side or the other can detune it. You may prefer to tape the tag to a piece of cardboard using masking tape.

Read Zone Test: Only use the provided test tag (Viper) for this test since other tag types may be tuned for glass and will not get good range in-hand. Start from the furthest point in the read zone where you would like the tag to be read. Hold the tag at the typical mounting height of the windshield or headlamp, depending on where you plan to mount the majority of tags. Walk the read zone while holding the tag steady at the intended height and orientation (vertical for Patriot-L). While walking, watch the reader and note how often it reads the tag. You may notice spots in the read zone where the tag doesn't read; this is normal for any RFID reader but you should get at least several reads as you walk the read zone. Stop in the location where the vehicle will have to stop if the gate did not open. You should get consistent, repeated reads at this location.

STEP 4: Connect the reader to the controller

Connect the reader to your controller per the wiring diagram below. The typical connection is just power and Wiegand. Optionally, wire the relay output to a relay or controller input for gate control. Refer to the manual if more information is needed.

Reader Pigtail Cable Wiring Diagram:

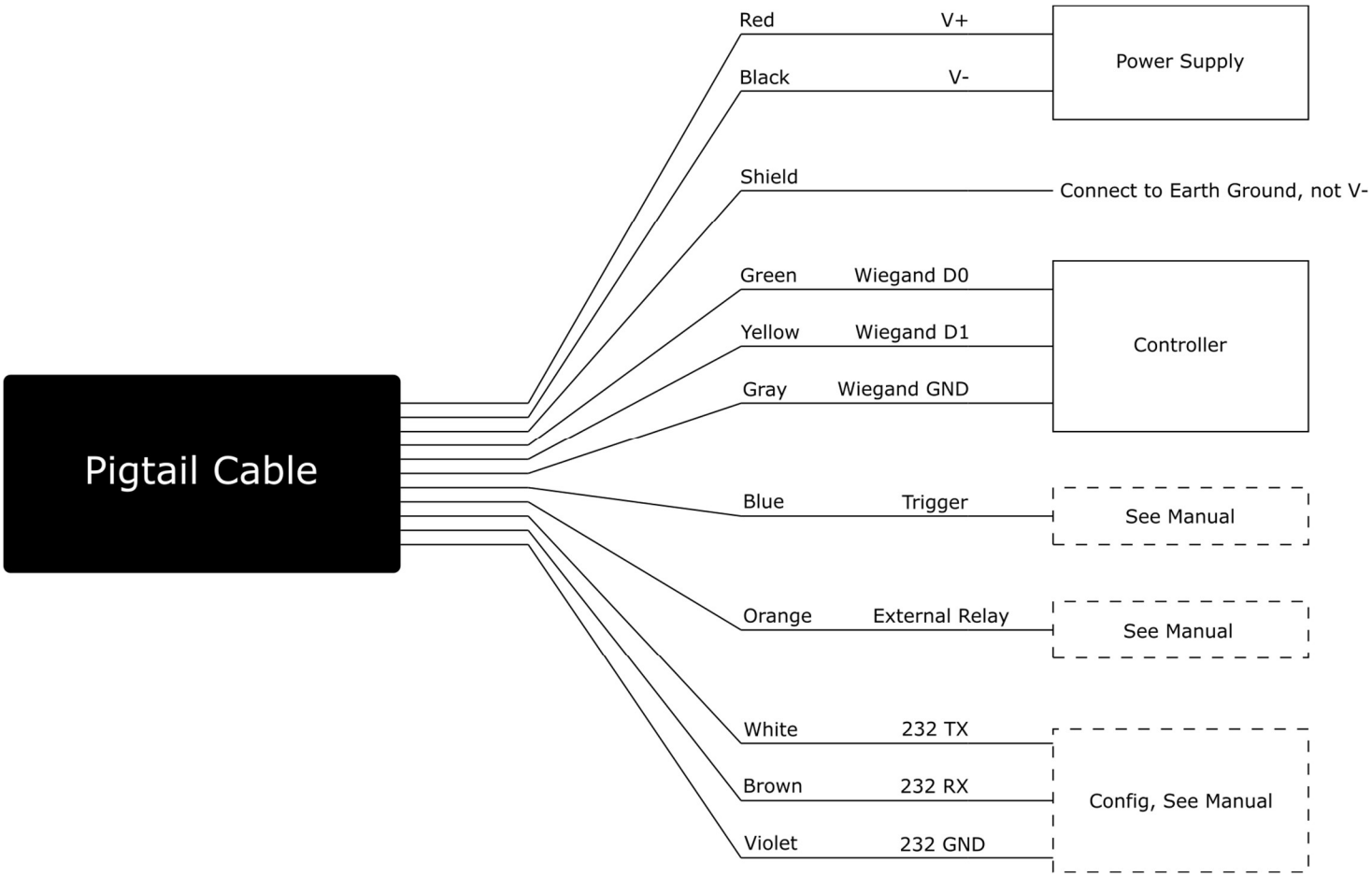

RFID Tag Mounting Guide

Introduction

Mounting your RFID tag in the proper position on the vehicle is the single most important factor that determines system performance. Incorrect mounting can make the difference between your tag reading 30 feet away or not reading beyond 1-2 feet from the reader. The best tag mounting position often varies from one vehicle to the next and can even vary from one RFID system installation to the next. EMX recommends testing the tag on each vehicle before permanently adhering it to guarantee good performance. Follow the instructions in this document to ensure your tag always reads when and where you need it to.

RFID Basics

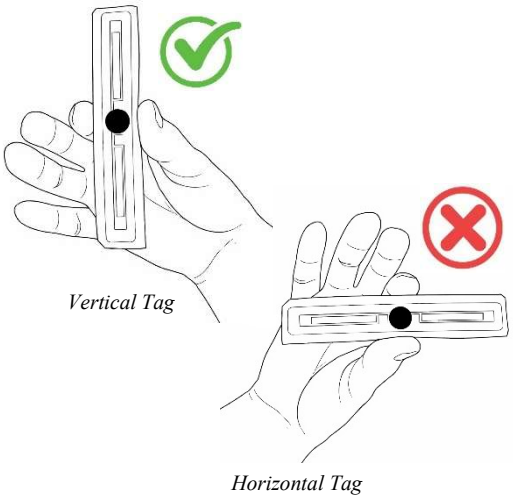

1.) The Patriot-L has a linear polarized antenna. It is optimized to read vertically oriented tags (up and down). **Horizontal tags (side to side) are not recommended.**
2.) RFID tags cannot be mounted on metal. They need to be mounted on glass or plastic at least 2 to 3 inches away from metal. If you have a special application that requires a RFID tag mount to metal, contact EMX Industries for a special tag for your specific application.
3.) Windshields often have metal oxide coatings that can affect RFID reading performance.
4.) All vehicles are different and the optimum tag placement will vary vehicle to vehicle.
5.) Test the tag location prior to permanently adhering it to your car. See Tag Test procedure below.

Tag Test: Determine Proper Tag Mounting Position

STEP 1: Test the tag mounting position first before permanently adhering it. Use painter's tape or other low adhesion tape to temporarily affix the tag. Drive the vehicle into the desired detection zone to ensure the tag reads in the zone of interest. Next, drive up to where the vehicle must stop if the gate hasn't opened and ensure it reads at this location. If it doesn't read, adjust the tag position and retest. See the next page for *Best Tag Mounting Positions* to determine where to test the tag on the vehicle. Many people aren't aware that **the best tag position varies depending on the RF environment and the vehicle model.**

STEP 2: Once the desired performance is confirmed, remove the painter's tape, remove the tag backing material and permanently attach the tag to the vehicle in the tested position. **Please note, after the tag is permanently attached it cannot be removed and repositioned without destroying the tag. Attempting to move the tag will reduce read range or make the tag non-readable. Remember, a slightly crooked tag is much better than trying to reposition a tag after it has been adhered to the vehicle.**

Tag Mounting Positions (Only mount tags vertically)

Test tags by following STEP 1 on the previous page. Common mounting positions are shown below:

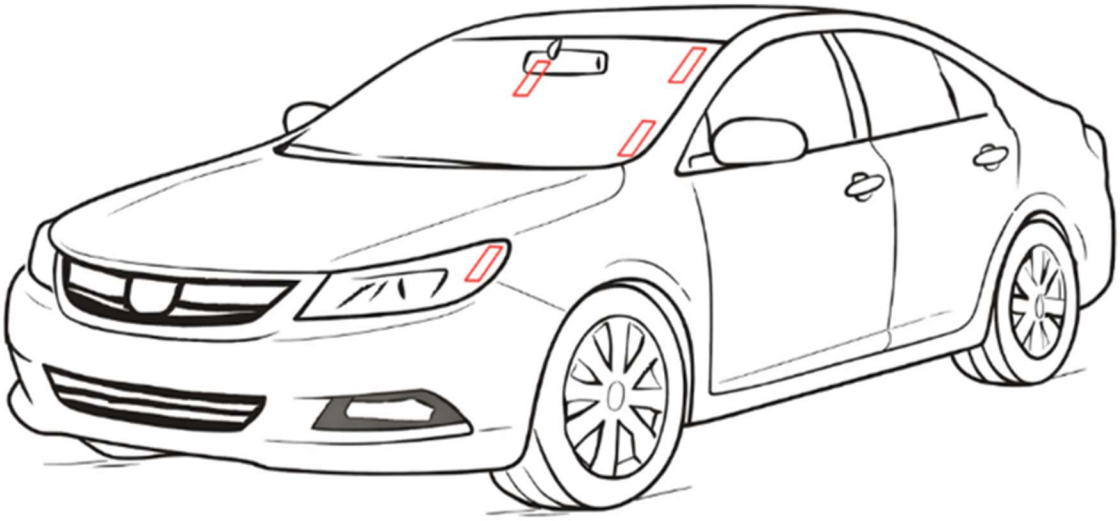

Vertical Tag Positions ONLY

- **Optimal Tag Position:** Tag mounted vertically in the upper driver's side windshield. Keep tag 2-3 inches from metal. In our testing, this position typically resulted in the best performance.
- **Good Tag Position:** Center mount the tag vertically on the windshield near the rear view mirror. This works well on vehicles that have metal in the windshield. Keep tag 2-3 inches from metal.
- **Alternate Tag Positions:** (1) Tag mounted vertically in the lower driver's side windshield. (2) Tag mounted vertically on the headlight. Location on the headlight can vary but try to keep it 2-3 inches from metal. Typically front bumpers are plastic so lower on the headlight sometimes works better.

These positions assume the reader is on the driver's side. If the reader is on the passenger side then mount the tag on that side instead.

Metal Oxide Coatings in Windshields

Some vehicles have a metal oxide coating in the windshield for various reasons such as UV tinting. This coating is often invisible. Like any metal, it severely degrades the performance of RFID tags. On such windshields, tags cannot usually be mounted in the windshield corners, but there is almost always an area without coating specifically for mounting RFID tags. Usually, this "RFID window" is under the rear view mirror as shown below:

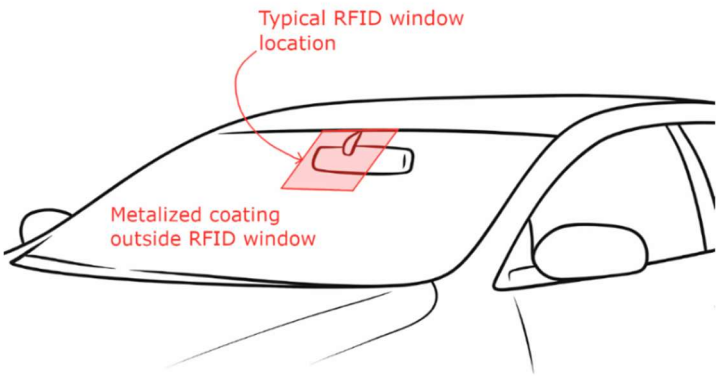

The RFID window is often unmarked and invisible. Consult your vehicle's owner's manual or search online to find the location of the RFID window and mount the tag in that location if windshield mounting is desired. The tag can be mounted on the outside or inside of the windshield, but make sure to always test with tape before permanently adhering the tag. If the tag extends outside of the RFID window it may not perform well. Keep in mind that you can also try mounting the tag on the headlight instead.

Tag Types

EMX Viper tags (TRES-900-VIPER) are multi-surface tags designed to work well on glass and plastics. Tags described as "windshield tags" such as EMX TRES-900-WS421 are electrically tuned to be mounted on glass and may not perform as well when mounted on plastics. If you have questions about where to mount your specific tags, contact EMX Technical Support.

Note: Old Viper and New Viper tags are interchangeable with EMX readers.

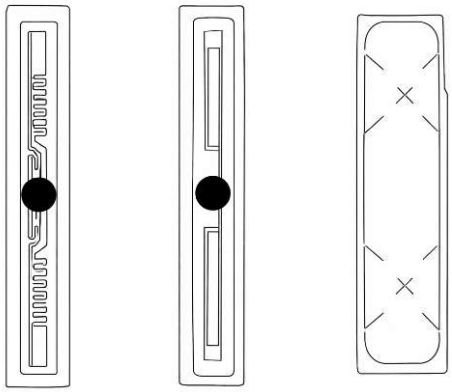

Old Viper New Viper Windshield Tag

Full Instruction Manual:

Reader Setup Software:

Technical Support
technical@emxinc.com
216-518-9889